paco jaansōn

LOVE ME by IB RUBINETTERIE

Basin Mixer
Product Code: LM200

Dimensions
65mm (w) x 134mm (d) x 180mm (h)

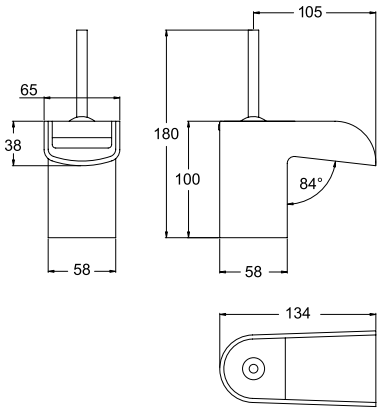

Maurizio Duranti

GOOD DESIGN

good design award 2005

DESCRIPTION

Simply being inspired by the love of nature + water, Maurizio Duranti was able to push such a mentality into the LoveMe collection.

Its sheer, iconic beauty cannot fail to be appreciated when adding sparkle and vitality to your bathroom.

Cascade spout washbasin mixer with no aerator so water flows loosely.

The winner of Good Design Award Love Me is now part of the permanent collection of the Chicago Atheneum in the Museum of Modern Art + Design.

Features
Solid Brass Construction
5 Star - Wels 5 Litres / Min
5 Years Limited Warranty
Made in Italy
Other Finishes - Brushed Nickel*
- Gloss White*
- Gloss Black*
- Gold*
- Rose Gold*

*By Special Order

PRICING STRUCTURE

Retail Pricing:
Chrome Plated Solid Brass
$695.00 gst inclusive

PACO JAANSON BATHROOM INNOVATIONS
Copyright ® 2015 All rights reserved

Telephone : 1800 006 260
Email - info@pacojaanson.com.au
www.pacojaanson.com.au