# paco jaansōn

## WAVE by IB RUBINETTERIE

Basin Mixer
Product Code: WA200

Dimensions
45 (w) x 162mm (d) x 155mm (h)

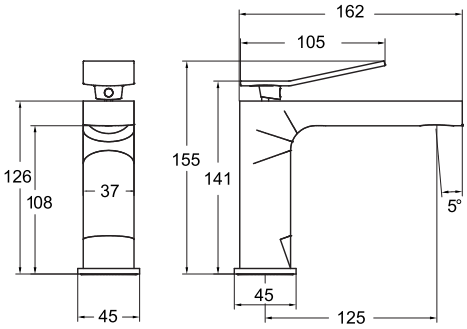

Marco Acerbis

GOOD DESIGN

good design award 2012

## DESCRIPTION

Born in 1973 Marco Acerbis graduated in architecture from Politecnico di Milano in 1998. From 1997 to 2004 he lived in London where he worked with Foster and Partnes.

He set up his own practice in Italy in 2004. His interest forcontemporary issues took him to be directly involved in sustainable architecture with the design and construction management of Polins which is certified CasaClima Class A+.

He is the winner of XXI Compasso d'Oro Special Mention and of the 2009 Red Dot Design Award.

Features
Solid Brass Construction
Polished Chrome Finish
Water Mark Australian Standard
5 Star - Wels 5 Litres / Min
5 Years Limited Warranty
Made in Italy
Other Finishes - Brushed Nickel*
- Gloss White*
- Gloss Black*
- Gold*
- Rose Gold*

*By Special Order

## PRICING STRUCTURE

Retail Pricing:
Chrome Plated Solid Brass
$440.00 gst inclusive

PACO JAANSON BATHROOM INNOVATIONS
Copyright ® 2015 All rights reserved

Telephone : 1800 006 260
Email - info@pacojaanson.com.au
www.pacojaanson.com.au