paco jaansōn

SINTRA

Bathroom Accessories - Toilet Roll Holder
Product Code: Hi1017SS (Brushed Nickel)

Pictured above with optional extra 30mm Backing Plates

Overall Dimensions
140mm (w) x 65(d) x 76mm (h)

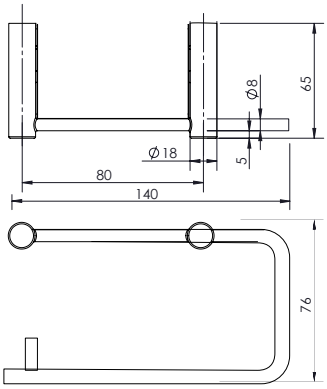

Features

Brushed Stainless Steel

7 Years Limited Manufacturers Warranty

1 Year Limited Commercial Warranty

30mm Backing Plates - Optional extra
Code: Hi-PLATE-SS $6.60 each gst inclusive

Available in Polished Finish (Hi1006PSS)
30mm Backing Plates - Optional extra
Code: Hi-PLATE-PSS $6.60 each gst inclusive

Complete Sintra Range

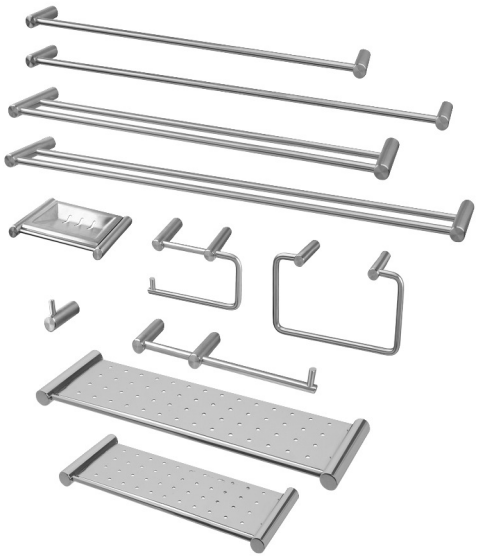

DESCRIPTION

People are forever looking for goods that will make a statement, will inspire, reflect their individuality and are designed to last.

Consumers requirements are the nucleus for every aspect of each product developed, and is reflected in each finished item.

Inherent in every Sintra component are the best grade stainless steel materials steming from the highest level of thinking.

PRICING STRUCTURE

Retail Pricing:

Hi1017SS (Brushed)	Hi1017PSS (Polished)
$60.00 gst inclusive	$72.00 gst inclusive

PACO JAANSON BATHROOM INNOVATIONS
Copyright ® 2021. All rights reserved. Updated 03rd May 2022.

Telephone : 1800 006 260
Email - info@pacojaanson.com.au
www.pacojaanson.com.au