paco jaansōn

BUTLER

Single Bowl Ceramic Sink
Product Code: SER7719

Featured With Tangent Sink Mixer

Overall Dimensions
610mm (w) x 400mm (d) x 200mm (h)

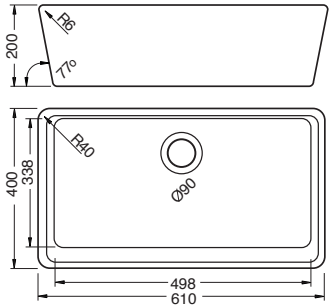

All dimensions are approximate only and are subject to change by the manufacturer.
Bench cut-outs should not be undertaken based on these dimensions

DESCRIPTION

All Butler sinks are made from the highest quality fire clay and finished with a glazed enamel internal coating. Hygienic, appealing and practical, Butler sinks bring you back to a more simple & uncomplicated period.

An array of external colours are available to the butler sink for you to choose from these include white, biscuit and black.

Features
Benchtop Mount Only
Colours as indent orders
Waste Not Included
25 Year Replacement Warranty
Available in Single Bowl Configuration
- 500 x 400mm - SER7718
- 610 x 400mm - SER7719

PRICING STRUCTURE

Retail Pricing:
High Grade Ceramic Construction
$330.00 gst inclusive

PACO JAANSON BATHROOM INNOVATIONS
Copyright ® 2015 All rights reserved

Telephone : 1800 006 260
Email - info@pacojaanson.com.au
www.pacojaanson.com.au