paco jaansōn

Projection

La Douche Wall Arm with Swivel Shower Head Set
Product Code: Hi-852

Overall Dimensions
105mm (w) x 220mm (d) x 159mm (h)

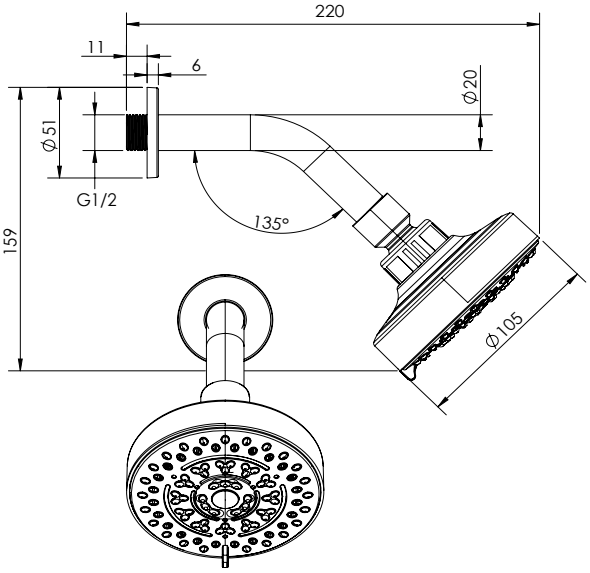

DESCRIPTION

Choosing the right shower for your bathroom is not just about good looks and design, it's also important to recognise the function you want it to perform in order to get the best possible result. It's about form + function, + the Projection Range offers something for every consideration.

This wall arm with multi function swivel shower head offers three spray options for added functionality. Its high quality finish and construction will look great in any bathroom, and its simple to install.

Distinction and magnificence emerges from the freshness of each design piece.

Features
Three Function Shower Head
Solid Brass Construction
Easy clean Silicone Nozzles
Durable Polished Chrome Finish
3 Star Wels - 9.0 Litres Per Minute
7 Years Limited Manufacturers Warranty
1 Year Limited Commercial Warranty

The more stars the more water efficient
WATER RATING
www.waterrating.gov.au
9.0 litres per minute
In accordance with AS/NZS 6400
Licence No. 0032
Registered Arcorp Enterprises for this Licence Number

7 YEARS WARRANTY

WaterMark
WMK26262

PRICING STRUCTURE

Retail Pricing:
Hi-852 Polished Chrome Finish
$99.00 gst inclusive

PACO JAANSON BATHROOM INNOVATIONS
Copyright © 2018. All rights reserved. Created 01st August 2021.

Telephone : 1800 006 260
Email - info@pacojaanson.com.au
www.pacojaanson.com.au