paco jaansōn

QUADDRO

Bathroom Accessories - Soap Dispenser
Product Code: HI-29032

Dimensions
86mm (w) x 105mm (d) x 135mm (h)

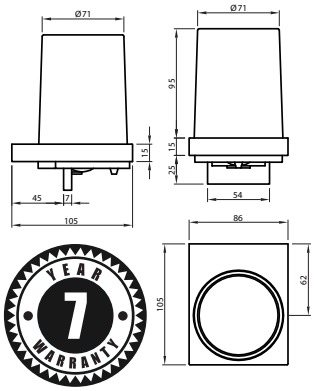

Features
Stylish Chrome Plate Finish
7 Years Limited Manufacturers Warranty
1 Year Limited Commercial Warranty
Complete Range

DESCRIPTION

Every piece in the Quaddro Range is the result of an evolution of thought and purpose that can only be achieved with the collaboration of knowledge and experience of the best professionals drawn from architecture, graphic, industrial & fashion design. All these disciplines brought together to develop and create something truely special.

Whether selected for quality, for design or for function the Quaddro Range will continue to please well into the future. The search for perfection through goods designed to last, of demonstrably high quality which will be around for a long time to come.

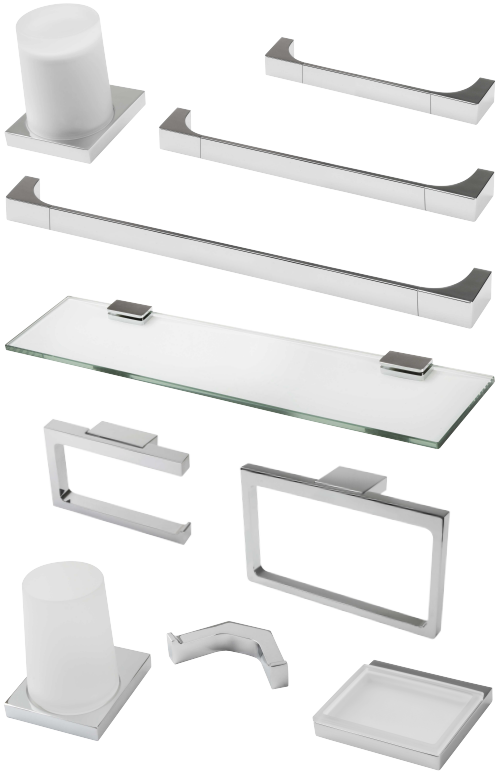

PRICING STRUCTURE

Retail Pricing:
Chrome Plated Brass
$120.00 gst inclusive

PACO JAANSON BATHROOM INNOVATIONS
Copyright © 2019. All rights reserved. Updated: 26th May 2019.

Telephone : 1800 006 260
Email - info@pacojaanson.com.au
www.pacojaanson.com.au