paco jaansōn

BENELLI BATHROOM FURNITURE

Boffi 750mm Vanity Walnut Veneer
Product Code: BOFFI-750-V008

Dimensions
740mm (w) x 507mm (d) x 552mm (h)

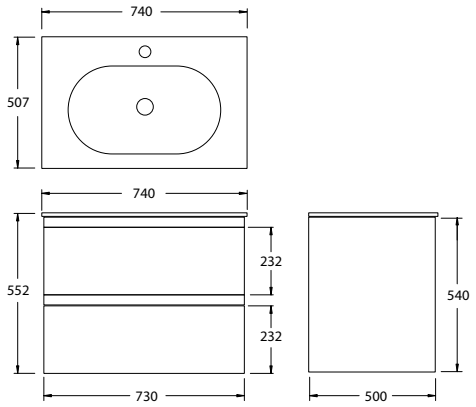

DESCRIPTION

Benelli's Bathroom furniture conveys elegance, and luxury; whilst combining aesthetics, ergonomics, and functionality. Curated with the finest materials, and numerous colours variations; timber veneer and solid surface wash basin.

Benelli aligns with manufacturing facilities all over the world, that are managed and operated using Australian quality assurance processes to achieve compliance with all relevant AS/NZS standards.

The Boffi range is simplistic in its design. Boasting an assortment of veneer finishes, tempered glass front and aluminium frame - no expense has been spared on creating this gorgeous centrepiece for any bathroom.

Features
Bevel - Grip Finger Pull Handles
Premium Soft-Close Drawers with European Mechanism
Satin Finish Solid Surface Basin
One Tap Hole
5 Years Limited Manufacturers Warranty
1 Year Limited Commercial Warranty
Textured Woodgrain Finish - Timber Veneer
Graphite Interior
Kickboard Optional Extra (KB750-WALNUT)

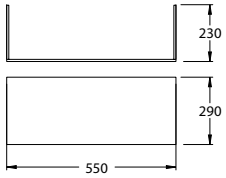

PRICING STRUCTURE

Retail Pricing:

BOFFI-750-V008 Vanity	KB750-WALNUT Kickboard
$1,567.50 gst inclusive	$159.50 gst inclusive

PACO JAANSON BATHROOM INNOVATIONS
Copyright ® 2018 All rights reserved

Telephone : 1800 006 260
Email - info@pacojaanson.com.au
www.pacojaanson.com.au