paco jaansōn

KITCHEN CARE

Single Bowl - Kitchen Sink Insert
Stainless Steel Code LA01-145

FEATURED WITH BENELLI CARE SINK MIXER

Dimensions
410mm (w) x 460mm (d) x 145mm (h)

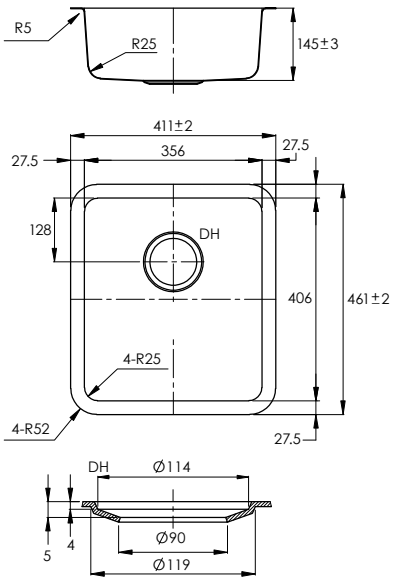

DESCRIPTION

The Paco Jaanson Care range is committed to providing innovative solutions formed through knowledge and insight to ensure critical living hubs like kitchens are designed to fully consider the needs of users and their carer's, to maximise independence and a greater degree of user comfort, dignity, respect and safety.

Their aged care and disability solutions are adaptable and allow flexibility when renovations or redesign is being considered. Benelli puts the user first so you can choose Paco Jaanson with confidence.

Features

Plug and waste basket included

Stainless Steel

15 Years Limited Manufacturers Warranty

1 Year Limited Commercial Warranty

Suitable for installation to comply to Australian Standard AS 1428.2-1992 Design for access and mobility - Enhanced & additional requirements - Buildings and facilities.

PRICING STRUCTURE

Retail Pricing:
Code LA01-145
$209.00 gst inclusive

PACO JAANSON BATHROOM INNOVATIONS
Copyright © 2018. All rights reserved. 10th September 2020.

Telephone : 1800 006 260
Email - info@pacojaanson.com.au
www.pacojaanson.com.au

paco jaansōn

KITCHEN CARE

Single Bowl - Kitchen Sink Insert
Stainless Steel Code LA01-145

ACCESS AND MOBILITY

Suitable for installation to comply to Australian Standard AS 1428.2-1992 Design for access and mobility - Enhanced and additional requirements - Buildings and facilities.

A5 SINKS For users in wheelchairs a shallow sink is essential, hence the preferred maximum bowl depth is 150 mm. The clearance underneath should comply with the requirements for washbasins in AS 1428.1

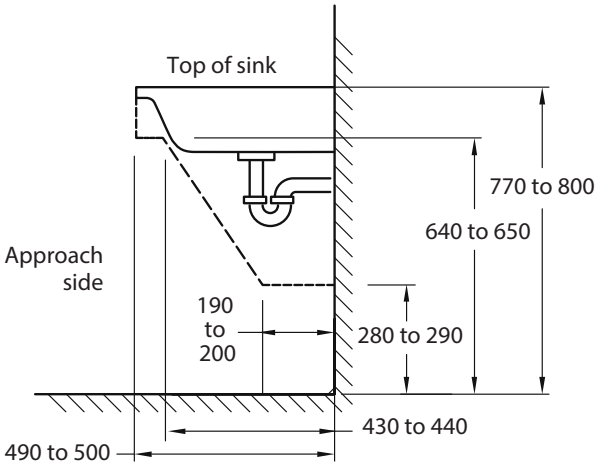

DIMENSIONS IN MILLIMETRES
SINK HEIGHT AND CLEARANCE

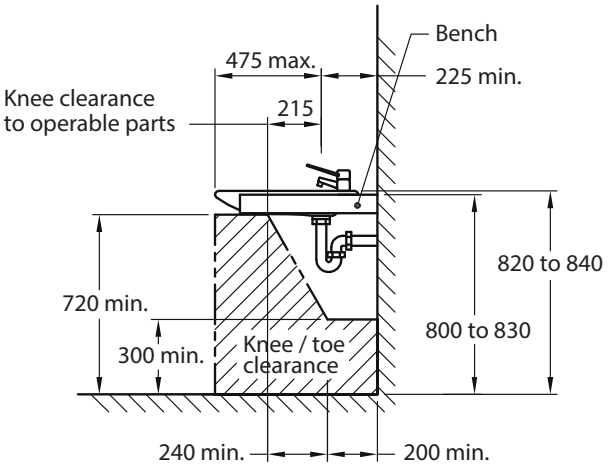

DIMENSIONS IN MILLIMETRES
WASHBASIN FOR ACCESSIBLE SOLE - OCCUPANCY UNIT

www.standards.org.au

All installations should be carried out by a qualified tradesman in compliance with the national Plumbing & Drainage Code and any State or Local Authority Regulations, in accordance with AS/NZS 3500 series of standards and AS/NZA 6400.

WARRANTY STATEMENT

This Paco Jaanson stainless steel sink is guaranteed for 15 years from date of purchase subject to the following conditions:

1. Installation has been carried out by a licensed plumber in accordance with the plumbing code of Australia.
2. All maintenance and adjustments to the product after the installation have been carried out by a licensed plumber.
3. Only mild household detergents and soft (non-abrasive) cloth has been used to clean the product.
4. All goods of substandard quality manufacture (excluding imperfections permitted within AS1976 - stainless steel used in sanitary applications) will be credited or replaced by Paco Jaanson when advised within the warranty period, subject to prior inspection and agreement.
5. Proof of purchase is required for warranty claims.

FULL WARRANTY & CONDITIONS
www.pacojaanson.com.au

LIMITATIONS

To the extent permitted under the Trade Practices Act and other relevant legislation, Paco Jaanson's liability is limited to:
The cost of replacing the goods, or The cost of obtaining equivalent goods, or The cost of having the goods repaired. Paco Jaanson is not responsible for any lack of operation or performance of goods (or any loss or damage) where goods are used or adapted for a with other goods not supplied by Paco Jaanson. It is the responsibility of the customer and installer before installation to ensure are correct and free of obvious visible faults.
Paco Jaanson is not responsible for the labour and rectification costs incurred in the above circumstance.

PRICING STRUCTURE

Retail Pricing:
Code LA01-145
$209.00 gst inclusive

PACO JAANSON BATHROOM INNOVATIONS
Copyright © 2018. All rights reserved. 10th September 2020.

Telephone : 1800 006 260
Email - info@pacojaanson.com.au
www.pacojaanson.com.au