paco jaansōn

PROJECTION

La Douche Shower Rail Set - Brushed Nickel Finish
Product Code: Hi-HED850-BN

Rail Dimensions
48mm (w) x 71mm (d) x 644mm (h)

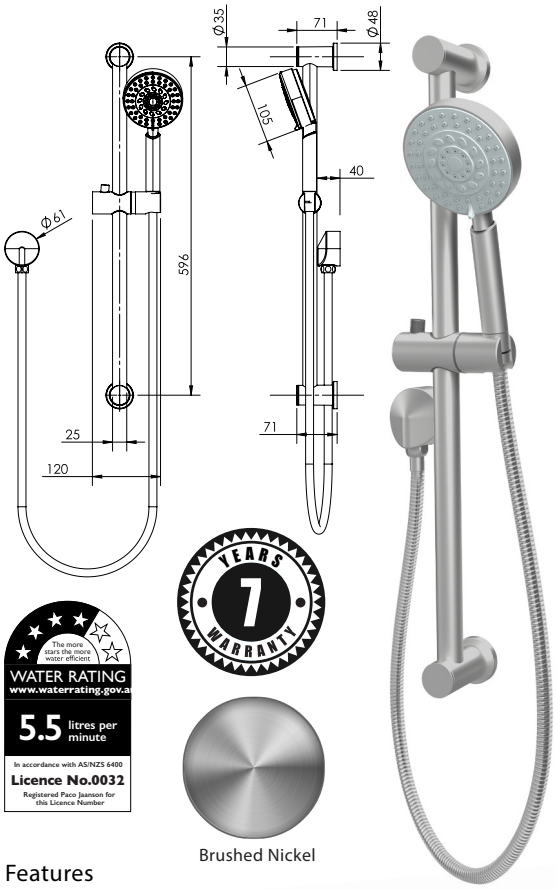

DESCRIPTION

Choosing the right shower for your bathroom is not just about good looks and design, it's also important to recognise the function you want it to perform in order to get the best possible result. It's about form + function, and the Projection Range offers something for everyone's consideration.

Project Shower Rails offer the functionality of adjustable height for the unit along the standard wall rail. All products in the collection of rail showers have hand sets that can be lifted and used as a hand shower which can be used to clean the body and the shower recess.

Hand showers offer the functionality of a fixed-point shower with the versatility of a moveable shower head which can be used to clean the body as well as the shower recess.

Features
Three Function Shower Head
Normal Spray - Mist Spray - Firm Jet Spray
7 Years Limited Manufacturers Warranty
1 Year Limited Commercial Warranty
4 Star - Wels 5.5 Litres Per Minute
Super Smooth Rail System
Round Elbow (Hi-C1ELBOW-BN) Included

Also available in:
Gunmetal (Code: Hi-HED850-GM)
Polished Chrome (Code: Hi-HED850)
Matt Black (Code: Hi-HED850-MB)
Brushed Rose Gold (Code: Hi-HED850-RGPVD)
Brass (Code: Hi-HED850-BR)
Antique Bronze (Code: Hi-HED850-GA)
Brushed Brass (Code: Hi-HED850-BB)

PRICING STRUCTURE

Retail Pricing:
Hi-HED850-BN (Brushed Nickel Finish)
$214.50 gst inclusive

PACO JAANSON BATHROOM INNOVATIONS
Copyright © 2021. All rights reserved. Updated: 30th September 2025.

Telephone : 1800 006 260
Email - info@pacojaanson.com.au
www.pacojaanson.com.au