paco jaansōn

LUCERNE

Back To Wall Floor Pan - Rimless Flushing System
Product Code: LT-1003D-R/HY2007

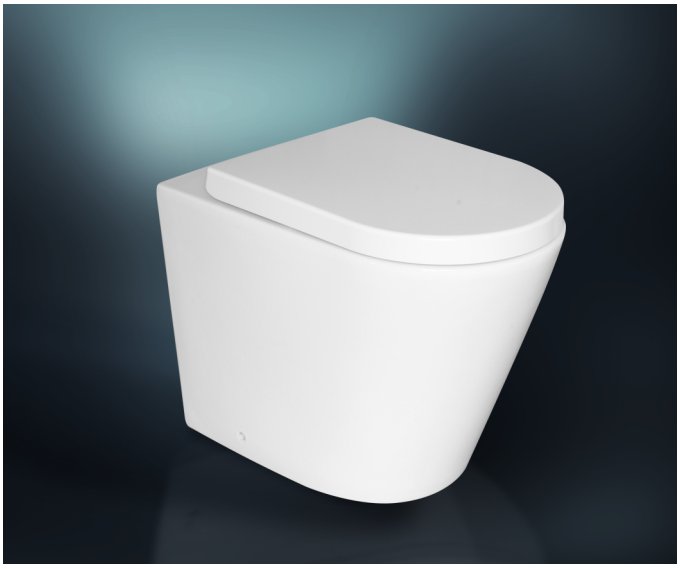

Pictured with Thick Flat UF - Quality Seat (HY2007)

Dimensions
360mm (w) x 580mm (d) x 430mm (h)

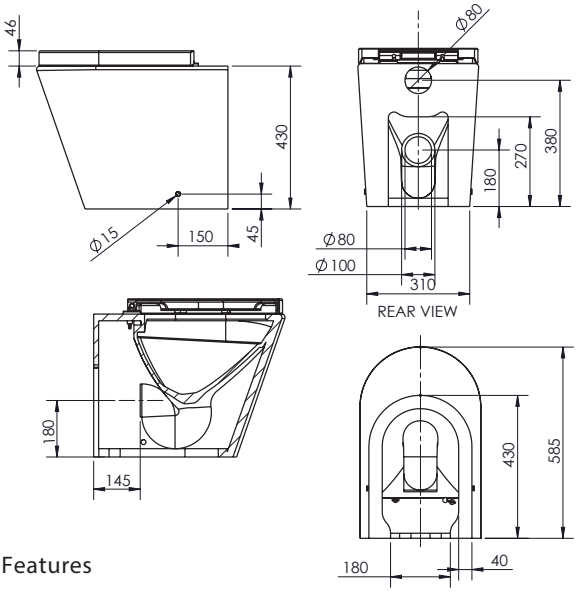

DESCRIPTION

A revolution in design, this ceramic floor pan by Paco Jaanson is a clean & contemporary economical choice. The Rimeless Flushing System is a unique feature of the Lucerne floor pan, making it a perfect upgrade or inclusion into any bathroom setting. The pan is manufactured with a flawless production process and is hand finished with a superior glazing technique. The final resut is determined by the connection between form and concept.
Quality and comfort.

Features
Rimless Flushing System
S-Trap : 115-145mm Adjustable with V-070 Connector
P-Trap : 180mm
Fixings / Brackets - Floor fixing kit included
4 Star - Wels 3.5 Litres Average
15 Years Limited Manufacturers Warranty
1 Year Limited Commercial Warranty
Thick Flat UF - Quality Seat (HY2007) included
Available with Slim Flat UF - Quality Seat (HY2049)
Code: LT-1003D-R/HY2049

CERAMIC 15 YEARS WARRANTY

WaterMark
AS 1172.1
AS 1172.2
Licence No.
WMK26168

The more stars the more water efficient
WATER RATING
www.waterratinggov.au
3.5 litres average flush
4.5L per full flush / 3L per half flush
In accordance with AS/NZS 6400
Licence No.1641
Chuanhua Huili Sanitary Ware Technical Company Limited

PRICING STRUCTURE

Retail Pricing:

LT-1003D-R/HY2007	LT-1003D-R/HY2049
$390.00 gst inclusive	$390.00 gst inclusive

PACO JAANSON BATHROOM INNOVATIONS
Copyright © 2020. All rights reserved. Updated 25th March 2025.

Telephone : 1800 006 260
Email - info@pacojaanson.com.au
www.pacojaanson.com.au

paco jaansōn

LUCERNE

Back To Wall Floor Pan - Rimless Flushing System
Product Code: LT-1003D-R/HY2007

Dimensions
360mm (w) x 580mm (d) x 430mm (h)

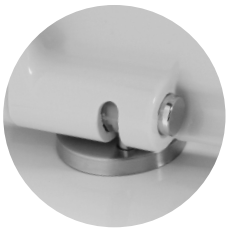

QuickRelease
Thick Flat UF
Quality Seat
(HY2007)

Hygienic Rimless
Flushing System

Smooth clean lines
for easy cleaning

Vitreous china for
added hygiene

Short projection
pan (580mm)

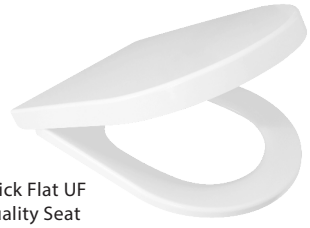

Thick Flat UF
Quality Seat
(HY2007)

LT-1003D-R/HY2007

Available with
Thin Flat UF
Quality Seat
(HY2049)

LT-1003D-R/HY2049

All installations should be carried out by a qualified tradesman in compliance with the national Plumbing & Drainage Code and any State or Local Authority Regulations, in accordance with AS/NZS 3500 series of standards and AS/NZA 6400.

WARRANTY STATEMENT

Paco Jaanson vitreous china is guaranteed for 15 years (seat cover, accessories, valves, washers are guaranteed for 1 year) from date of purchase subject to the following conditions:

1. Installation has been carried out by a licensed plumber in accordance with the plumbing code of Australia.
2. All maintenance and adjustments to the product after the installation have been carried out by a licensed plumber.
3. Only mild household detergents and soft (non-abrasive) cloth has been used to clean the product.
4. All goods of substandard quality manufacture (excluding imperfections permitted within AS1976 - vitreous china used in sanitary applications) will be credited or replaced by Paco Jaanson when advised within the warranty period, subject to prior inspection and agreement.
5. Proof of purchase is required for warranty claims.

FULL WARRANTY & CONDITIONS
www.pacojaanson.com.au

LIMITATIONS

To the extent permitted under the Trade Practices Act and other relevant legislation, Paco Jaanson's liability is limited to:

The cost of replacing the goods, or The cost of obtaining equivalent goods, or The cost of having the goods repaired. Paco Jaanson is not responsible for any lack of operation or performance of goods (or any loss or damage) where goods are used or adapted for a with other goods not supplied by Paco Jaanson. It is the responsibility of the customer and installer before installation to ensure are correct and free of obvious visible faults.
Paco Jaanson is not responsible for the labour and rectification costs incurred in the above circumstance.

PRICING STRUCTURE

Retail Pricing:

LT-1003D-R/HY2007	LT-1003D-R/HY2049
$390.00 gst inclusive	$390.00 gst inclusive

PACO JAANSON BATHROOM INNOVATIONS
Copyright © 2020. All rights reserved. Updated 25th March 2025.

Telephone : 1800 006 260
Email - info@pacojaanson.com.au
www.pacojaanson.com.au