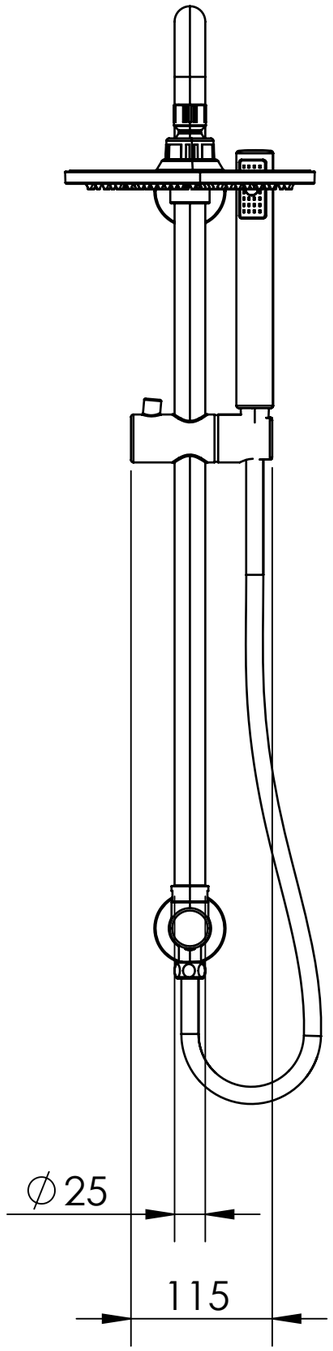

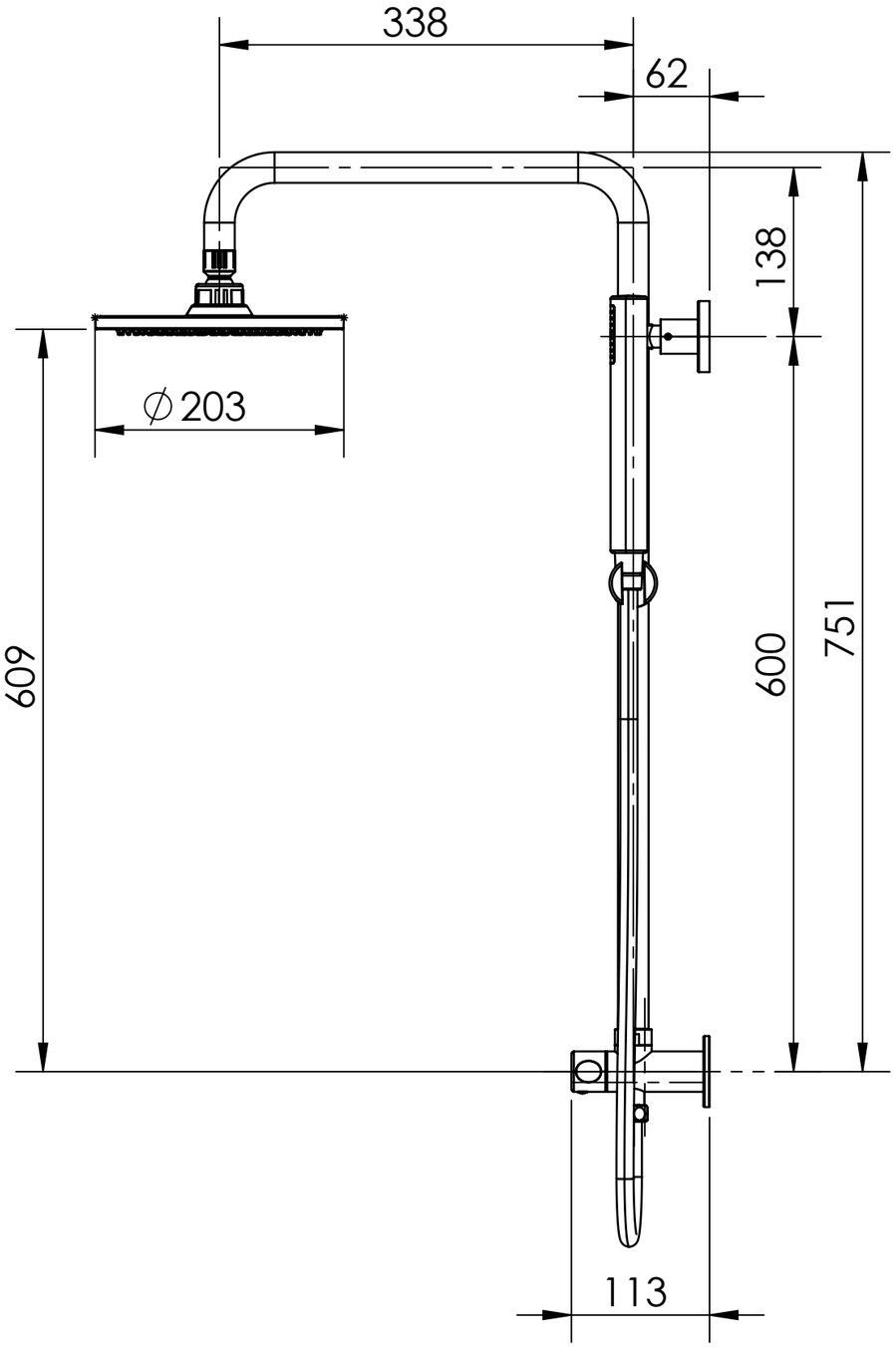

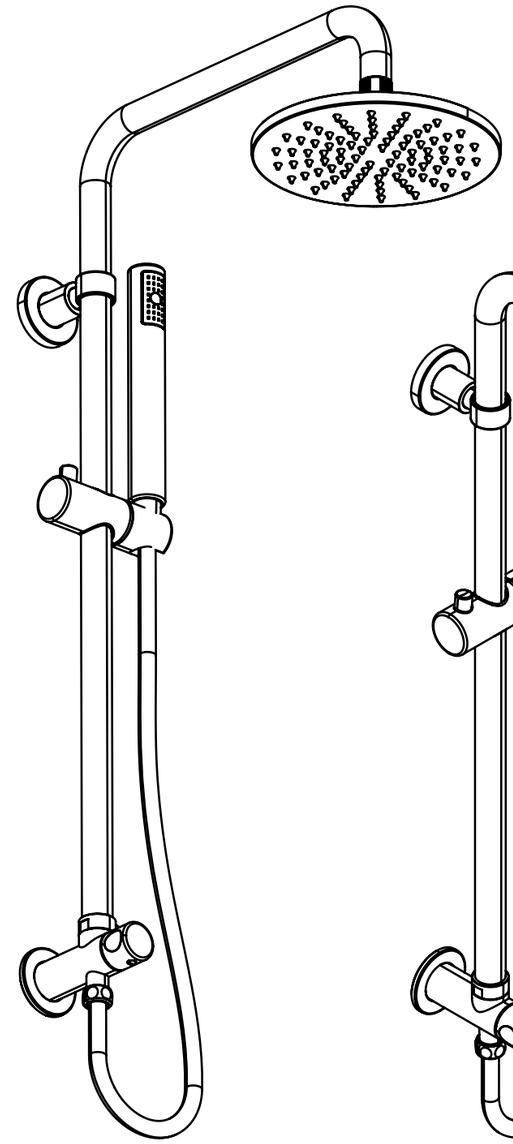

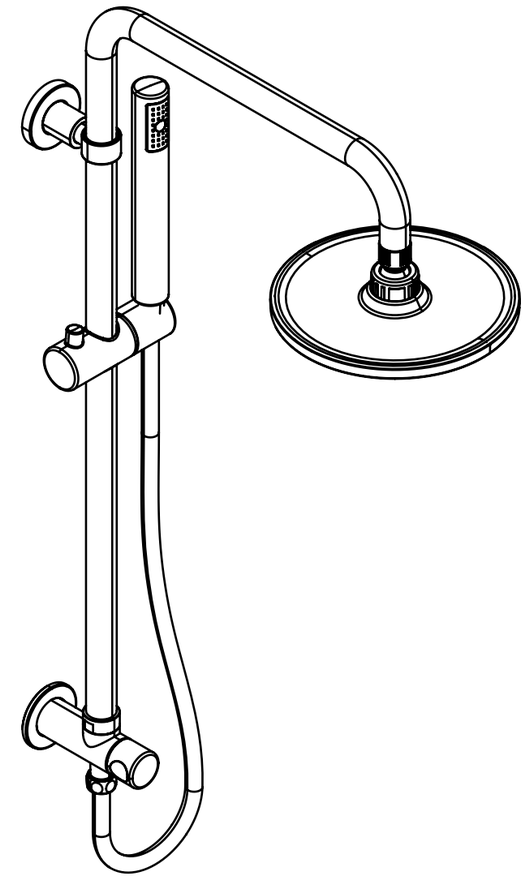

paco jaansōn • PROJECTION • Hi-RDN-976A283-BR

Dimensions are approximate. Information provided with this drawing is representative of the actual product available at the time of production. Due to our policy of continuous product development, the designs and specifications depicted are subject to change without notice. Please confirm all particulars with your sales consultant prior to purchase. Each Paco Jaanson product is covered by a limited warranty. Full terms and conditions are available from your sales consultant or via our website.